VC-BC601P_VC-BC701P RS-232 command set

No	Issue Date	Description	Apply Firmware
1	2019/08/23	First version.	NA
2	2019/09/24	Add PelcoD command	NA
3	2020/01/06	Add command: CAM_WD/ CAM_WDParameterInq	VC-BC701P : VBX100_VBY101_VBU108_VBW108_VBT104_VKA132
4	2020/06/08	Add command/ Inquiry: 1. Tally_Lamp_Brightness 2. CAM_Audio_Encode_Sample_Rate for 16KHz (AAC) 3. CAM_Audio_Delay_Enable 4. CAM_Audio_Delay_Time	■VC-BC601P : VKF100_VKG101_VKE111_VKD116_VKC105_VKB140 ■VC-BC701P : VBX100_VBY101_VBU113_VBW116_VBT105_VKA140
5	2020/07/15	Remove Menu related commands	NA
6	2020/09/11	Add chapters for RS232 over IP	NA
7	2020/12/09	Modify Command/ Inquiry 1. CAM_ Zoom 2. Resolution Setting 3. HDMI Format 4. CAM_Preset_AF 5. CAM_DZOOM_LIMIT Add Block Inquiry command.	■VC-BC701P : VBX100_VBY101_VBU115_VBW120_VBT106_VKA151
8	2021/01/11	Add notification for commands: 1. CAM_IP/HDMI_Mode 2. HDMI Format 3. Resolution Setting 4. Resolution SetttingInq	■VC-BC601P : VKF100_VKG101_VKE112_VKD117_VKC106_VKB151
9	2021/07/20	Add command: 1. Motionless preset	■VC-BC601P : VKF100_VKG101_VKE115_VKD120_VKC106_VKB156

		2. Modify Block_Inquiry command	■VC-BC701P : VBX100_VBY101_VBU117_VBW123_VBT106_VKA156
10	**2021/09/27**	**Add command:** **1. CAM_ZoomFocus** **Delete command:** **1. Motionless preset** **Modify command:** **1. Resolution Setting**	**■VC-BC701P: VCAX100** **■VC-BC601P: VCAY100**

***Notice:**

1. **The RS-232 command list is for VC-BC601P_VC-BC701P.**
2. **The yellow highlight means the latest update.**
3. **The blue highlight means the deleted item.**

1. Communication Protocol

Transmit Method: Asynchronous Interface Half Duplex Serial Communication

- Transmit Speed: 9600bps or 38400bps
- Start bit: 1Bit
- Parity Check: NA
- Data Bit: 8Bit
- Stop Bit: 1Bit

2. The wire diagram

The RS232 wire diagram between presenter and remote controller as below

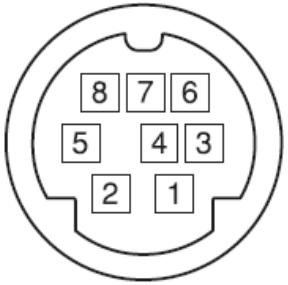

No	Pins
1	DTR IN
2	DSR IN
3	TXD IN
4	GND
5	RXD IN
6	GND

3. ACK & Completion message

	Reply Packet	Note
Ack	X0 4Y FF	Y = socket number
Completion (commands)	X0 5Y FF	Y = socket number
Completion (Inquiries)	X0 50 ... FF	
X = 9 to F==>camera address + 8 , Y=1 to 2		

4. Error message

Error Packet	Description
X0 6Y 02 FF	Syntax Error
X0 6Y 03 FF	Command buffer full
X0 6Y 04 FF	Command cancelled
X0 6Y 05 FF	No socket (to be cancelled)
X0 6Y 41 FF	Command not executable
X = 9 to F==>camera address + 8, Y = socket number, Y=0 to 2, 0: Inqurity not execution	

5. Command execution cancel

	Cancel Packet	Note
Cancel	8X 2Y FF	Y = socket number
X = 1 to 7==>camera address, Y = socket number, Y=1 to 2		

6. Network Change

	Packet	Note
Address set	88 30 01 FF	Always broadcasted(Reply:88 30 0w FF w:1+Address)
Network Change	X0 38 FF	
X = 9 to F==>camera address + 8		

7. IF_Clear

	Command	Reply Packet Note
IF_Clear	8X 01 00 01 FF	X0 50 FF
IF_Clear (broadcast)	88 01 00 01 FF	88 01 00 01 FF
X = 1 to 7==>camera address (For inquiry packet)		
X = 9 to F==>camera address +8 (For reply packet)		

8. Zoom Focus Position Table

Zoom Position	Wide end		Tele end
	0000	to	4000
Focus Position	Far end		Near end
	000	to	47A

9. AE_Iris Table

	Index(pq)	Value
Iris	0F	Close
	0E	F1.6
	0D	F2
	0C	F2.2
	0B	F2.7
	0A	F3.2
	09	F3.8
	08	F4.5
	07	F5.4
	06	F6.3
	05	F7.8
	04	F9
	03	F11
	02	F13
	01	F16
	00	F18

10. AE_Shutter Table

	Index(pq)	60/30 mode	50/25 mode
Shutter Speed	00	1/10000	1/10000
	01	1/5000	1/5000
	02	1/3000	1/3000
	03	1/2500	1/2500
	04	1/2000	1/1750
	05	1/1500	1/1250
	06	1/1000	1/1000
	07	1/725	1/600
	08	1/500	1/425
	09	1/350	1/300
	0A	1/250	1/215
	0B	1/180	1/150
	0C	1/120	1/120
	0D	1/100	1/100
	0E	1/90	1/75
	0F	1/60	1/50
	10	1/30	1/25
	11	1/15	1/12
	12	1/8	1/6
	13	1/4	1/3
	14	1/2	1/2
	15	1/1	1/1

11. AE_Gain Table

	Index(pq)	Value
Gain	0F	+45 dB
	0E	+42 dB
	0D	+39 dB
	0C	+36 dB
	0B	+33 dB
	0A	+30 dB
	09	+27 dB
	08	+24 dB
	07	+21 dB
	06	+18 dB
	05	+15 dB
	04	+12 dB
	03	+9 dB
	02	+6 dB
	01	+3 dB
	00	0 dB

12. AE_Exposure Comp. Table

	Index(pq)	Value(Level)	(Gain)Value
Exposure Comp.	0A	5	+5 dB
	09	4	+4 dB
	08	3	+3 dB
	07	2	+2 dB
	06	1	+1 dB
	05	0	0 dB
	04	-1	-1 dB
	03	-2	-2 dB
	02	-3	-3 dB
	01	-4	-4 dB
	00	-5	-5 dB

13. Camera RS232 Command List

Command Set	Command	Command Packet	Comments
AddressSet	Broadcast	88 30 01 FF	Address setting
IF_Clear	Broadcast	88 01 00 01 FF	I/F Clear
CommandCancel	–	8x 2p FF	p: Socket No. (=1 or 2)
CAM_Power	On	8x 01 04 00 02 FF	Power ON/OFF
	Off (Standby)	8x 01 04 00 03 FF	
CAM_Zoom	Stop	8x 01 04 07 00 FF	
	Tele (Standard)	8x 01 04 07 02 FF	
	Wide (Standard)	8x 01 04 07 03 FF	
	Tele Step	8x 01 04 07 04 FF	
	Wide Step	8x 01 04 07 05 FF	
	Tele (Variable)	8x 01 04 07 2p FF	p=0 (Low) to 7 (High)
	Wide (Variable)	8x 01 04 07 3p FF	
	Direct	8x 01 04 47 0p 0q 0r 0s FF	pqrs: Zoom Position Min. 0000h Max. 4000h (In Dzoom limit = x1) Max. 7AC0h (In DZoom = x2 ~ 12x)
	Direct(Speed Variable)	8x 01 04 47 0p 0q 0r 0s 0t FF	pqrs: Zoom Position Min. 0000h Max. 4000h (In Dzoom limit = x1) Max. 7AC0h (In DZoom = x2 ~ 12x) t:Zoom speed, t:0~7(0 :Low, 7:High)
	Zoom Memory Mode	8x 01 04 47 00 02 FF	Zoom Memory Mode ON/OFF ON : zoom position apply last memory when power on. OFF : zoom return to wide side when power on.
		8x 01 04 47 00 03 FF	

Command Set	Command	Command Packet	Comments
CAM_Focus	Stop	8x 01 04 08 00 FF	Enabled during Manual Focus Mode
	Far (Standard)	8x 01 04 08 02 FF	
	Near (Standard)	8x 01 04 08 03 FF	
	Far Step	8x 01 04 08 04 FF	
	Near Step	8x 01 04 08 05 FF	
	Far (Variable)	8x 01 04 08 2p FF	p=0 (Low) to 7 (High) (* Enabled during Manual Focus Mode)
	Near (Variable)	8x 01 04 08 3p FF	
	Direct	8x 01 04 48 0p 0q 0r 0s FF	pqrs: Focus Position , pqrs parameters are in the General Zoom Foucs Table (* Enabled during Manual Focus Mode)
	Auto Focus	8x 01 04 38 02 FF	AF ON/OFF
	Manual Focus	8x 01 04 38 03 FF	
	Auto/Manual	8x 01 04 38 10 FF	
	One Push Trigger	8x 01 04 18 01 FF	One Push AF Trigger(* Enabled during Manual Focus Mode)
CAM_Curve	Curve tracking	8x 01 04 38 03 02 FF	Curve tracking ON/OFF
	Zoom tracking	8x 01 04 38 03 03 FF	
AF Sensitivity	High	8x 01 04 58 01 FF	High / Middle / Low
	Middle	8x 01 04 58 02 FF	
	Low	8x 01 04 58 03 FF	
AF Frame	Auto	8x 01 04 5C 01 FF	Auto / Full Frame / Center
	Full Frame	8x 01 04 5C 02 FF	
	Center	8x 01 04 5C 03 FF	
	Auto/Full Frame/Center	8x 01 04 5C 10 FF	

Command Set	Command	Command Packet	Comments
CAM_ZoomFocus	Direct(Speed Variable)	8x 01 04 47 0p 0q 0r 0s 0t 0u 0v 0w 0x FF	pqrs: Zoom Position(0x0000~0x4000) tuvw: Focus Position(0x0000 ~ 0x0969) x:Speed(0~7) (* Enabled during Manual Focus Mode)
	Direct	8x 01 04 47 0p 0q 0r 0s 0t 0u 0v 0w FF	pqrs: Zoom Position(0x0000~0x4000) tuvw: Focus Position(0x0000 ~ 0x0969) (* Enabled during Manual Focus Mode)
CAM_ZoomFocus	Direct	8x 01 04 47 0p 0q 0r 0s 0t 0u 0v 0w FF	pqrs: Zoom Position(0x0000~0x4000) tuvw: Focus Position(0x00 ~ 0x575) (* Enabled during Manual Focus Mode)
CAM_Initialize	Lens	8x 01 04 19 01 FF	Lens Initialization Start
Resolution Setting	Select Resolution	8x 01 06 35 0p 0q FF	pq: 0x01:QFHD 4K(3840 x 2160) - 60p (*For VC-BC701P only)
			0x02:QFHD 4K(3840 x 2160) - 59.94p (*For VC-BC701P only)
			0x03:QFHD 4K(3840 x 2160) - 50p (*For VC-BC701P only)
			0x04:QFHD 4K(3840 x 2160) - 30p (*For VC-BC701P only)
			0x05:QFHD 4K(3840 x 2160) - 29.97p (*For VC-BC701P only)
			0x06:QFHD 4K(3840 x 2160) - 25p (*For VC-BC701P only)
			0x07:FHD 1080P(1920 x 1080) - 60p

Command Set	Command	Command Packet	Comments
			0x08:FHD 1080P(1920 x 1080) - 59.94p
			0x09:FHD 1080P(1920 x 1080) - 50p
			0x0A:FHD 1080P(1920 x 1080) - 30p
			0x0B:FHD 1080P(1920 x 1080) - 29.97p
			0x0C:FHD 1080P(1920 x 1080) - 25p
			0x0D:HD 720P(1280 x 720) - 60p
			0x0E:HD 720P(1280 x 720) - 59.94p
			0x0F:HD 720P(1280 x 720) - 50p
			0x10:HD 720P(1280 x 720) - 30p
			0x11:HD 720P(1280 x 720) - 29.97p
			0x12:HD 720P(1280 x 720) - 25p
			0x13:480P(720 x 480) - 59.94p
			0x14:FHD 1080i(1920 x 1080) - 60i
			0x15:FHD 1080i(1920 x 1080) - 59.94i
			0x16:FHD 1080i(1920 x 1080) - 50i
HDMI Format	RGB	8x 01 06 36 00 FF	HDMI Format : RGB / YUV420 / YUV422 (* YUV420 only available on 4K59.94P/4K50P)
	YUV420	8x 01 06 36 01 FF	
	YUV422	8x 01 06 36 02 FF	
HDMI Output Range	16~235	8x 01 06 37 01 FF	HDMI Output Range : 16~235 / 1~254
	1~254	8x 01 06 37 02 FF	
CAM_WB	Auto	8x 01 04 35 00 FF	Auto
	Indoor	8x 01 04 35 01 FF	Indoor mode
	Outdoor	8x 01 04 35 02 FF	Outdoor mode
	One Push WB	8x 01 04 35 03 FF	One Push WB mode

Command Set	Command	Command Packet	Comments
	ATW	8x 01 04 35 04 FF	Auto Tracing White Balance
	Manual	8x 01 04 35 05 FF	Manual mode
	Sodium Lamp	8x 01 04 35 0C FF	Sodium lamp source fixed mode
	One Push Trigger	8x 01 04 10 05 FF	One Push WB Trigger(* Enabled during One Push WB Mode)
CAM_WB_RGAIN	Reset	8x 01 04 03 00 FF	Manual R gain Setting (* Enabled during WB Manual mode) pq = 0x00 To 0x80
	Up	8x 01 04 03 02 FF	
	Down	8x 01 04 03 03 FF	
	Direct	8x 01 04 43 00 00 0p 0q FF	
CAM_WB_BGAIN	Reset	8x 01 04 04 00 FF	Manual B gain Setting (* Enabled during WB Manual mode) pq = 0x00 To 0x80
	Up	8x 01 04 04 02 FF	
	Down	8x 01 04 04 03 FF	
	Direct	8x 01 04 44 00 00 0p 0q FF	
CAM_AE	Full Auto	8x 01 04 39 00 FF	Automatic Exposure mode
	Manual	8x 01 04 39 03 FF	Manual Control mode
	Shutter Priority	8x 01 04 39 0A FF	Shutter Priority Automatic Exposure mode
	Iris Priority	8x 01 04 39 0B FF	Iris Priority Automatic Exposure mode
CAM_Flickerless	Off	8x 01 04 3C 00 FF	
	50Hz	8x 01 04 3C 01 FF	
	60Hz	8x 01 04 3C 02 FF	
CAM_Shutter	Reset	8x 01 04 0A 00 FF	Shutter Setting (* Enabled during AE Shutter Priority/Manaual Mode)
	Up	8x 01 04 0A 02 FF	
	Down	8x 01 04 0A 03 FF	
	Direct	8x 01 04 4A 00 00 0p 0q FF	pq: Shutter Position , pq: 00 To 15

Command Set	Command	Command Packet	Comments
			(1/1 ~ 1/10000)
CAM_Iris	Reset	8x 01 04 0B 00 FF	Iris Setting (* Enabled during Iris Priority/Manaual Mode)
	Up	8x 01 04 0B 02 FF	
	Down	8x 01 04 0B 03 FF	
	Direct	8x 01 04 4B 00 00 0p 0q FF	pq: Iris Position , pq: 00 To 0F
	Iris Limit (Min.)	8x 01 04 2B 0p FF	p: Iris F number , p: 3 To C (* Disabled during AE Manual Mode and IrisPri Mode)
	Iris Limit (Max.)	8x 01 04 2A 0p FF	p: Iris F number , p: 3 To C (* Disabled during AE Manual Mode and IrisPri Mode)
	Illegal Iris Open	8x 01 04 2F 02 FF	Illegal Open Iris ON/OFF
		8x 01 04 2F 03 FF	
CAM_Gain	Reset	8x 01 04 0C 00 FF	Gain Setting (* Enabled during AE Manaual Mode)
	Up	8x 01 04 0C 02 FF	
	Down	8x 01 04 0C 03 FF	
	Direct	8x 01 04 4C 00 00 0p 0q FF	pq: Gain Position, pq:00 To 0F (* Enabled during AE Manaual Mode) (* 0dB ~ +45dB)
	Gain Limit	8x 01 04 2C 0p FF	p: Gain Position , p: 3 To F (* Disabled during AE Manual Mode)
CAM_Bright	Reset	8x 01 04 0D 00 FF	Bright Setting
	Up	8x 01 04 0D 02 FF	
	Down	8x 01 04 0D 03 FF	
	Direct	8x 01 04 4D 00 00 0p 0q FF	pq: Bright Position, pq:0x00~0x0F

Command Set	Command	Command Packet	Comments
CAM_ExpComp	On	8x 01 04 3E 02 FF	Exposure Compensation ON/OFF
	Off	8x 01 04 3E 03 FF	
	Reset	8x 01 04 0E 00 FF	Exposure Compensation Amount Setting (* Enabled during ExpComp On)
	Up	8x 01 04 0E 02 FF	
	Down	8x 01 04 0E 03 FF	
	Direct	8x 01 04 4E 00 00 0p 0q FF	pq: ExpComp Position , pq: 00 To 0A (* Enabled during ExpComp On)
CAM_BackLight	On	8x 01 04 33 02 FF	Back Light Compensation ON/OFF
	Off	8x 01 04 33 03 FF	
CAM_SpotAE	On	8x 01 04 59 02 FF	Spot Mode ON/OFF
	Off	8x 01 04 59 03 FF	
	Position	8x 01 04 29 0p 0q 0r 0s FF	pq: X - axis, pq: 00 To 06 (* Center position : 3) rs : Y - axis, rs : 00 To 04 (* Center position : 2)
CAM_WDR	Set Parameter	8x 01 04 2D 0p FF	WDR Mode p:0~3
CAM_Aperture (Sharpness)	Reset	8x 01 04 02 00 FF	Aperture Control
	Up	8x 01 04 02 02 FF	
	Down	8x 01 04 02 03 FF	
	Direct	8x 01 04 42 00 00 0p 0q FF	pq: Aperture Gain, pq: 00 To 0E
CAM_2DNR	Set 2DNR Level	8x 01 04 53 0p FF	p: NR Level Setting, p: 0 To 3
CAM_3DNR	Set 3DNR Level	8x 01 04 54 0p FF	p: NR Level Setting, p: 0: OFF 1: Low 2: Type 3: Max

Command Set	Command	Command Packet	Comments
CAM_Gamma	Gamma setting	8x 01 04 5B 0p FF	p: 0 To 3
CAM_LR_Reverse	On	8x 01 04 61 02 FF	Mirror Image ON/OFF
	Off	8x 01 04 61 03 FF	
CAM_PictureEffect	Off	8x 01 04 63 00 FF	Picture Effect Setting
	Neg.Art	8x 01 04 63 02 FF	
	B&W	8x 01 04 63 04 FF	
CAM_PictureFlip	On	8x 01 04 66 02 FF	Picture flip ON/OFF
	Off	8x 01 04 66 03 FF	
CAM_Rotation (Mirror + Flip)	On	8x 01 04 67 02 FF	Rotation 180 degree ON/OFF
	Off	8x 01 04 67 03 FF	
CAM_ICR	On	8x 01 04 01 02 FF	ICR ON/OFF (NIGHT : ICR ON, DAY : ICR OFF)
	Off	8x 01 04 01 03 FF	
CAM_Memory (Preset)	Reset	8x 01 04 3F 00 pp FF	pp: Memory Number (pp: 0x00 To 0x7F) (* Preset address : 0~127) (* Preset address : 0 mapping preset 1 on webpage and remote)
	Set	8x 01 04 3F 01 pp FF	
	Recall	8x 01 04 3F 02 pp FF	
	Reset	8x 01 04 3F 10 pp FF	pp: Memory Number (pp: 0x00 To 0x7F) (* Preset address : 128~255)
	Set	8x 01 04 3F 11 pp FF	
	Recall	8x 01 04 3F 12 pp FF	
CAM_ColorGain(Saturation)	Direct	8x 01 04 49 00 00 0p 0q FF	pq: color Gain, pq:0x00~0x0F
Factory Reset	System Factroy Reset - User	8x 01 04 3F 03 00 FF	Factory Reset
	System Factroy Reset -	8x 01 04 3F 03 01 FF	

Command Set	Command	Command Packet	Comments
	Hard		
CAM_Image_Mode	Default	8x 01 04 3F 04 00 FF	Image Mode Default/Custom
	Custom	8x 01 04 3F 04 01 FF	
CAM_Image_Load	Image Mode Load	8x 01 04 3F 05 0p FF	p : Load Image mode - default to Custom (p=0)
CAM Prompt	On	8x 01 04 07 00 02 FF	OSD Prompt ON/OFF
	Off	8x 01 04 07 00 03 FF	
CAM_ColorHue	Direct	8x 01 04 4F 00 00 0p 0q FF	pq: color Hue, pq:0x00~0x0F
Tally Mode	Set Tally Mode	8x 01 7E 01 0A 01 0p FF	p: 0: (Red:OFF Green:OFF) 4: (Red:Low light Green:OFF) - Tally Lamp must be Enabled 5: (Red:High light Green:OFF) - Tally Lamp must be Enabled
Tally_Lamp	On	8x 01 7E 01 0A 00 02 FF	Tally Lamp ON/OFF
	Off	8x 01 7E 01 0A 00 03 FF	
CAM_IP/HDMI_Mode (*For VC-BC701P only)	HDMI	8x 01 CB 02 FF	p: 2: HDMI 8: HDMI + Stream 18 : Stream 28 : HDMI + USB
	Stream	8x 01 CB 18 FF	
OSD_Cross_line	On	8x 01 04 75 DD 04 02 FF	OSD Cross Line ON/OFF
	Off	8x 01 04 75 DD 04 03 FF	
IP_DHCP_OnOff	On	8x 01 7C 01 02 FF	Set DHCP ON/OFF
	Off	8x 01 7C 01 03 FF	
IP_Address_IPv4	Set IP Addresss	8x 01 7C 02 0p 0q 0r 0s 0t 0u 0v 0x FF	address : pq.rs.tu.vx (HEX), pq = 0~255, rs = 0~255, tu = 0~255, vx = 0~255,

Command Set	Command	Command Packet	Comments
			e.g. 192.168.100.150 => 81 01 7C 02 0C 00 0A 08 06 04 09 06 FF
IP_Netmask	Set Netmask	8x 01 7C 03 0p 0q 0r 0s 0t 0u 0v 0x FF	address : pq.rs.tu.vx (HEX), pq = 0~255, rs = 0~255, tu = 0~255, vx = 0~255, e.g. 255.255.255.0 => 81 01 7C 03 0F 0F 0F 0F 0F 0F 00 00 FF
IP_Gateway	Set Getway	8x 01 7C 04 0p 0q 0r 0s 0t 0u 0v 0x FF	address : pq.rs.tu.vx (HEX), pq = 0~255, rs = 0~255, tu = 0~255, vx = 0~255, e.g. 192.168.100.254 => 81 01 7C 04 0C 00 0A 08 06 04 0F 0E FF
IP_Dns	Set DNS	8x 01 7C 05 0p 0q 0r 0s 0t 0u 0v 0x FF	address : pq.rs.tu.vx (HEX), pq = 0~255, rs = 0~255, tu = 0~255, vx = 0~255, e.g. 8.8.8.8 => 81 01 7C 05 00 08 00 08 00 08 00 08 FF
CAM_Audio_OnOff	On	8x 01 04 68 02 FF	Audio ON/OFF
	Off	8x 01 04 68 03 FF	
CAM_Audio_In_Type	Line In	8x 01 04 6B 02 FF	Audio In Type
	Mic In	8x 01 04 6B 03 FF	
CAM_Audio_Volume	Volume	8x 01 04 6E 0p FF	p: 0x00~0x0A
CAM_UART_Baud_Rate	9600	8x 01 04 24 00 00 00 FF	Baud rate
	38400	8x 01 04 24 00 00 01 FF	
CAM_Audio_Encode_Sample_Rate	Select Audio Encode Sample Rate	8x 01 04 6D 0p FF	p: 0: 48KHz (AAC)
			1: 44.1KHz (AAC)
			2: 16KHz (AAC)
			3: 16KHz (G.711)
			4: 8KHz (G.711)

Command Set	Command	Command Packet	Comments
SY_JOYSTICK	Non-SY_Joystick	8x 01 04 11 03 00 FF	p: 0:Non-SY_Joystick 1: SY_Joystick
	SY_Joystick	8x 01 04 11 03 01 FF	
CAM_Preset_AF	On	8x 01 04 5E 02 FF	
	Off	8x 01 04 5E 03 FF	
CAM_DZOOM_LIMIT	Set Digital Zoom Limit	8x 01 04 26 0p FF	p: 0x00(x1) to 0x0B(x12)

14. RS232 Inquiry Command List

Inquiry Command	Command Packet	Inquiry Packet	Comments
CAM_PowerInq	8x 09 04 00 FF	y0 50 02 FF	On
		y0 50 03 FF	Off (Standby)
CAM_SystemStatusInq	8x 09 04 00 01 FF	y0 50 00 FF	Ready
		y0 50 01 FF	Processing
CAM_OpticalZoomPosInq	8x 09 04 47 FF	y0 50 0p 0q 0r 0s FF	pqrs: Zoom Position , pqrs: 0x0000~0x7AC0 DZoom Limit = x1, Zoom Position range : 0x0000 ~ 0x4000 DZoom Limit = x2 ~ x12, Zoom Position range : 0x0000 ~ 0x7AC0
CAM_ZoomMemoryModeInq	8x 09 04 47 00 FF	y0 50 02 FF	On
		y0 50 03 FF	Off
CAM_FocusModeInq	8x 09 04 38 FF	y0 50 02 FF	Auto Focus
		y0 50 03 FF	Manual Focus
CAM_FocusPosInq	8x 09 04 48 FF	y0 50 0p 0q 0r 0s FF	pqrs: Focus Position, pqrs: parameters are in the General Zoom Foucs Table near end to far end
CAM_CurveModeInq	8x 09 04 38 03 FF	y0 50 02 FF	Curve tracking
		y0 50 03 FF	Zoom tracking
AF SensitivityInq	8x 09 04 58 FF	y0 50 01 FF	High
		y0 50 02 FF	Middle
		y0 50 03 FF	Low
AF FrameInq	8x 09 04 5C FF	y0 50 01 FF	Auto
		y0 50 02 FF	Full Frame
		y0 50 03 FF	Center
Resolution SetttingInq	8x 09 06 23 FF	y0 50 0p 0q FF	pq: 0x01:QFHD 4K(3840 x 2160) - 60p (*For VC-BC701P only)

Inquiry Command	Command Packet	Inquiry Packet	Comments
			0x02:QFHD 4K(3840 x 2160) - 59.94p
			0x03:QFHD 4K(3840 x 2160) - 50p
			0x04:QFHD 4K(3840 x 2160) - 30p (*For VC-BC701P only)
			0x05:QFHD 4K(3840 x 2160) - 29.97p
			0x06:QFHD 4K(3840 x 2160) - 25p
			0x07:FHD 1080P(1920 x 1080) - 60p
			0x08:FHD 1080P(1920 x 1080) - 59.94p
			0x09:FHD 1080P(1920 x 1080) - 50p
			0x0A:FHD 1080P(1920 x 1080) - 30p
			0x0B:FHD 1080P(1920 x 1080) - 29.97p
			0x0C:FHD 1080P(1920 x 1080) - 25p
			0x0D:HD 720P(1280 x 720) - 60p
			0x0E:HD 720P(1280 x 720) - 59.94p
			0x0F:HD 720P(1280 x 720) - 50p
			0x10:HD 720P(1280 x 720) - 30p
			0x11:HD 720P(1280 x 720) - 29.97p
			0x12:HD 720P(1280 x 720) - 25p
			0x13:480P(720 x 480) - 59.94p
			0x14:FHD 1080i(1920 x 1080) - 60i
			0x15:FHD 1080i(1920 x 1080) - 59.94i
			0x16:FHD 1080i(1920 x 1080) - 50i
CAM_HdmiFormatInq	8x 09 06 36 FF	y0 50 00 FF	RGB
		y0 50 01 FF	YUV420 4K50 / 4K60 only (*For VC-BC701P only)
		y0 50 02 FF	YUV422

Inquiry Command	Command Packet	Inquiry Packet	Comments
CAM_HdmiOutputRangeInq	8x 09 06 37 FF	y0 50 01 FF	16~235
		y0 50 02 FF	1~254
CAM_WBModeInq	8x 09 04 35 FF	y0 50 00 FF	Auto
		y0 50 01 FF	In Door
		y0 50 02 FF	Out Door
		y0 50 03 FF	One Push WB
		y0 50 04 FF	ATW
		y0 50 05 FF	Manual
		y0 50 0C FF	Sodium Lamp
CAM_RGainInq	8x 09 04 43 FF	y0 50 00 00 0p 0q FF	pq : R Gain, pq: 00 To 80
CAM_BGainInq	8x 09 04 44 FF	y0 50 00 00 0p 0q FF	pq : B Gain, pq: 00 To 80
CAM_AEModeInq	8x 09 04 39 FF	y0 50 00 FF	Full Auto
		y0 50 03 FF	Manual
		y0 50 0A FF	Shutter Priority
		y0 50 0B FF	Iris Priority
CAM_FlickerlessInq	8x 09 04 3C FF	y0 50 00 FF	Off
		y0 50 01 FF	50Hz
		y0 50 02 FF	60Hz
CAM_ShutterPosInq	8x 09 04 4A FF	y0 50 00 00 0p 0q FF	pq: Shutter Position, pq: 00 To 15
CAM_IrisPosInq	8x 09 04 4B FF	y0 50 00 00 0p 0q FF	pq: Iris Position, pq: 00 To 0F
CAM_GainPosInq	8x 09 04 4C FF	y0 50 00 00 0p 0q FF	pq: Gain Position, pq: 00 To 0F
CAM_IrisLimitInq (Min.)	8x 09 04 2B FF	y0 50 0q FF	p: Iris Limit, p: 3 To C
CAM_IrisLimitInq (Max.)	8x 09 04 2A FF	y0 50 0q FF	p: Iris Limit,p: 3 To C

Inquiry Command	Command Packet	Inquiry Packet	Comments
CAM_IllegalIrisOpenInq	8x 09 04 2F FF	y0 50 02 FF	On
		y0 50 03 FF	Off
CAM_GainLimitInq	8x 09 04 2C FF	y0 50 0q FF	p: Gain Limit,p: 3 To F
CAM_BrightPosInq	8x 09 04 4D FF	y0 50 00 00 0p 0q FF	pq : Bright Position, pq: 00 To 0xF
CAM_ExpCompModeInq	8x 09 04 3E FF	y0 50 02 FF	On
		y0 50 03 FF	Off
CAM_ExpCompPosInq	8x 09 04 4E FF	y0 50 00 00 0p 0q FF	pq: ExpComp Position, pq: 00 To 0A
CAM_BackLightModeInq	8x 09 04 33 FF	y0 50 02 FF	On
		y0 50 03 FF	Off
CAM_SpotAEModeInq	8x 09 04 59 FF	y0 50 02 FF	On
		y0 50 03 FF	Off
CAM_SpotAEPosInq	8x 09 04 29 FF	y0 50 0p 0q 0r 0s FF	pq : X - axis, pq : 00 To 06 rs : Y - axis, rs : 00 To 04
CAM_WDParameterInq	8x 09 04 2D FF	y0 50 0p FF	p: WDR mode (p: 0 To 3)
CAM_ApertureInq	8x 09 04 42 FF	y0 50 00 00 0p 0q FF	pq: Aperture Gain, pq: 00 To 0E
CAM_2DNRModeInq	8x 09 04 53 FF	y0 50 0p FF	p: NR Level Setting, p: 0 To 3

Inquiry Command	Command Packet	Inquiry Packet	Comments
CAM_3DNRModeInq	8x 09 04 54 FF	y0 50 0p FF	p: NR Level Setting, p: 0: OFF 1: Low 2: Type 3: Max
CAM_GammaInq	8x 09 04 5B FF	y0 50 0p FF	Gamma p: 0 To 3
CAM_LR_ReverseModeInq	8x 09 04 61 FF	y0 50 02 FF	On
		y0 50 03 FF	Off
CAM_PictureEffectModelnq	8x 09 04 63 FF	y0 50 00 FF	Off
		y0 50 02 FF	Neg.Art
		y0 50 04 FF	B&W
CAM_PictureFlipModeInq	8x 09 04 66 FF	y0 50 02 FF	On
		y0 50 03 FF	Off
CAM_RotationModeInq	8x 09 04 67 FF	y0 50 02 FF	On
		y0 50 03 FF	Off
CAM_ICRInq	8x 09 04 01 FF	y0 50 02 FF	On (NIGHT)
		y0 50 03 FF	Off (DAY)
CAM Version Inq	8x 09 00 02 FF	y0 50 pp qq rr ss jj jj kk FF	ppqq: Vender ID(0001) rrss: Model ID ** Other : 0513 jjjj: Rom revision(0104) kk: Maxinum socket(02)
CAM FW version Inq - Boot	8x 09 00 02 00 00 FF	y0 50 mm nn oo pp qq rr ss FF	mmnnooppqqrrss : XXXxxxx

Inquiry Command	Command Packet	Inquiry Packet	Comments
CAM FW version Inq - CM0	8x 09 00 02 00 01 FF	y0 50 mm nn oo pp qq rr ss FF	mmnnooppqqrrss : XXXxxxx
CAM FW version Inq - RTOS	8x 09 00 02 00 02 FF	y0 50 mm nn oo pp qq rr ss FF	mmnnooppqqrrss : XXXxxxx
CAM FW version Inq - Linux	8x 09 00 02 00 03 FF	y0 50 mm nn oo pp qq rr ss FF	mmnnooppqqrrss : XXXxxxx
CAM FW version Inq - MCU	8x 09 00 02 00 04 FF	y0 50 mm nn oo pp qq rr ss FF	mmnnooppqqrrss : XXXxxxx
CAM FW version Inq - IQ	8x 09 00 02 00 05 FF	y0 50 mm nn oo pp qq rr ss FF	mmnnooppqqrrss : XXXxxxx
CAM Image ModeInq	8x 09 04 3F 04 FF	y0 50 00 FF	Default
		y0 50 01 FF	Custom
Prompt Inq	8x 09 04 07 00 FF	y0 50 02 FF	On
		y0 50 03 FF	Off
CAM SERIAL INQ	8x 09 02 18 FF	y0 50 aa bb cc dd ee ff gg hh ii FF	aa bb cc dd ee ff gg hh ii : Serial Number (ASCII)
MAC_Address_Read	8x 09 04 78 FF	y0 50 0a 0b 0c 0d 0e 0f 0g 0h 0i 0j 0k 0l FF	MAC Address = ab: cd: ef: gh: ij: kl
Tally Mode Inq	8x 09 7E 01 0A 01 FF	y0 50 0p FF	p: 0: (Red:OFF Green:OFF) 4: (Red:Low light Green:OFF) - Tally Lamp must be Enabled 5: (Red:Highlight Green:OFF) - Tally Lamp must be Enabled
Tally Lamp Inq	8x 09 7E 01 0A 00 FF	y0 50 0p FF	p: 2 Enable 3: Disable

Inquiry Command	Command Packet	Inquiry Packet	Comments
CAM IP/HDMI Inq	8x 09 7E CB FF	y0 50 02 FF	HDMI
		y0 50 08 FF	HDMI + IP
		y0 50 18 FF	Stream
CAM ID INQ	8x 09 7E CE FF	y0 50 aa bb cc dd ee ff gg hh ii jj kk ll FF	aa bb cc dd ee ff gg hh ii jj kk ll : Camera ID (ASCII)
CAM_ColorGainInq	8x 09 04 49 FF	y0 50 00 00 0p 0q FF	pq: Color Gain setting , pq: 0x00 To 0x0F
CAM_ColorHueInq	8x 09 04 4F FF	y0 50 00 00 0p 0q FF	pq: Color Hue setting , pq: 0x00 To 0x0F
CAM_ErrCodeROM_01_10 Inq	8x 09 00 02 02 00 FF	y0 50 aa bb cc dd ee ff gg hh ii kk FF	aa~kk : error code count --> 1~10
CAM_ErrCodeROM_11_20 Inq	8x 09 00 02 02 01 FF	y0 50 aa bb cc dd ee ff gg hh ii kk FF	aa~kk : error code count --> 11~20
CAM_ErrCodeROM_21_30 Inq	8x 09 00 02 02 02 FF	y0 50 aa bb cc dd ee ff gg hh ii kk FF	aa~kk : error code count --> 21~30
CAM_ErrCodeROM_31_40 Inq	8x 09 00 02 02 03 FF	y0 50 aa bb cc dd ee ff gg hh ii kk FF	aa~kk : error code count --> 31~40
CAM_ErrCodeROM_41_50 Inq	8x 09 00 02 02 04 FF	y0 50 aa bb cc dd ee ff gg hh ii kk FF	aa~kk : error code count --> 41~50
CAM_ErrCodeCurrent_01_10 Inq	8x 09 00 02 03 00 FF	y0 50 aa bb cc dd ee ff gg hh ii kk FF	aa~kk : error code count --> 1~10
CAM_ErrCodeCurrent_11_20 Inq	8x 09 00 02 03 01 FF	y0 50 aa bb cc dd ee ff gg hh ii kk FF	aa~kk : error code count --> 11~20
CAM_ErrCodeCurrent_21_30 Inq	8x 09 00 02 03 02 FF	y0 50 aa bb cc dd ee ff gg hh ii kk FF	aa~kk : error code count --> 21~30
CAM_ErrCodeCurrent_31_40 Inq	8x 09 00 02 03 03 FF	y0 50 aa bb cc dd ee ff gg hh ii kk FF	aa~kk : error code count --> 31~40

Inquiry Command	Command Packet	Inquiry Packet	Comments
CAM_ErrCodeCurrent_41_50 Inq	8x 09 00 02 03 04 FF	y0 50 aa bb cc dd ee ff gg hh ii kk FF	aa~kk : error code count --> 41~50
IP_DHCP_OnOff_Inq	8x 09 7C 01 FF	y0 50 0p FF	p: 2: ON, 3: OFF
IP_Address_IPv4_Inq	8x 09 7C 02 FF	y0 50 0p 0q 0r 0s 0t 0u 0v 0x FF	address : pq.rs.tu.vx (HEX)
IP_Netmask_Inq	8x 09 7C 03 FF	y0 50 0p 0q 0r 0s 0t 0u 0v 0x FF	address : pq.rs.tu.vx (HEX)
IP_Gateway_Inq	8x 09 7C 04 FF	y0 50 0p 0q 0r 0s 0t 0u 0v 0x FF	address : pq.rs.tu.vx (HEX)
IP_Dns_Inq	8x 09 7C 05 FF	y0 50 0p 0q 0r 0s 0t 0u 0v 0x FF	address : pq.rs.tu.vx (HEX)
CAM_Audio_OnOff_Inq	8x 09 04 68 FF	y0 50 02 FF	On
		y0 50 03 FF	Off
CAM_AudioInType_Inq	8x 09 04 6B FF	y0 50 02 FF	Line In
		y0 50 03 FF	Mic In
CAM_AudioEncodeType_Inq	8x 09 04 6C FF	y0 50 02 FF	AAC
		y0 50 03 FF	G.711
CAM_AudioVolumeInq	8x 09 04 6E FF	y0 50 0p FF	p: Volume , p: 0x0 To 0xA
CAM_UartBaudRateInq	8x 09 04 24 00 FF	y0 50 00 00 FF	9600 bps
		y0 50 00 01 FF	38400 bps
		y0 50 00 02 FF	115200 bps
CAM_AudioSampleRateInq	8x 09 04 6D FF	y0 50 00 FF	48KHz (AAC)
		y0 50 01 FF	44.1KHz (AAC)
		y0 50 02 FF	16KHz (AAC)
		y0 50 03 FF	16KHz (G.711)
		y0 50 04 FF	8KHz (G.711)
CAM_AudioDelay_OnOff_Inq	8x 09 04 6F FF	y0 50 02 FF	On
		y0 50 03 FF	Off

Inquiry Command	Command Packet	Inquiry Packet	Comments
CAM_AudioDelay_Time_Inq	8x 09 04 6A FF	y0 50 0p 0q 0r FF	pqr : audioDelayTme(hex), range - 001 ~ 1F4 (equals 1 ~ 500 in decimal)
SY_JOYSTICK_Inq	8x 09 06 11 03 FF	y0 50 00 FF	Non-SY_Joystick
		y0 50 01 FF	SY_Joystick
CAM_Lens_Control_BlockInq	8x 09 7E 7E 00 FF	y0 50 00 00 00 00 00 00 00 00 00 00 00 00 00 FF	Please refer "Block_Inquiry" page
CAM_Camera_Control_BlockInq	8x 09 7E 7E 01 FF	y0 50 00 00 00 00 00 00 00 00 00 00 00 00 00 FF	Please refer "Block_Inquiry" page
CAM_Other_BlockInq	8x 09 7E 7E 02 FF	y0 50 00 00 00 00 00 00 00 00 00 00 00 00 00 FF	Please refer "Block_Inquiry" page
CAM_Extended_1_BlockInq	8x 09 7E 7E 03 FF	y0 50 00 00 00 00 00 00 00 00 00 00 00 00 00 FF	Please refer "Block_Inquiry" page
CAM_Extended_2_BlockInq	8x 09 7E 7E 04 FF	y0 50 00 00 00 00 00 00 00 00 00 00 00 00 00 FF	Please refer "Block_Inquiry" page
CAM_Extended_3_BlockInq	8x 09 7E 7E 05 FF	y0 50 00 00 00 00 00 00 00 00 00 00 00 00 00 FF	Please refer "Block_Inquiry" page

15. Camera Block Inquiry Command List

15.1 CAM_Lens_Control_BlockInq

bit	0	1	2	3	4	5	6	7	8	9	10	11	12	13	14	15
7	Destination Address	0	0	0	0	0	0	0	0	0	0	0	0	0	0	1
6		1	0	0	0	0	0	0	0	0	0	0	0	0	0	1
5		0	0	0	0	0	0	0	0	0	0	0	0	0	0	1
4		1	0	0	0	0	0	0	0	0	0	0	0	0	0	1
3	Source Address	0	Zoom Position (HH)	Zoom Position (HL)	Zoom Position (LH)	Zoom Position (LL)	0	0	Focus Position (HH)	Focus Position (HL)	Focus Position (LH)	Focus Position (LL)	0	0	0	1
2		0					0	0					0	0	0	1
1		0					0	0					Digital Zoom 0:Off 1:On	0	0	1
0		0					0	0					Focus Mode 0:Manual 1:Auto	0	0	1

15.2 CAM_Camera_Control_BlockInq

bit	0	1	2	3	4	5	6	7	8	9	10	11	12	13	14	15
7	Destination Address	0	0	0	0	0	0	0	0	0	0	0	0	0	0	1
6		1	0	0	0	0	0	0	0	0	0	0	0	0	0	1
5		0	0	0	0	0	0	0	0	0	Shutter Position	0	0	0	0	1
4		1	0	0	0	0	0	0	0	WDR 0:Off 1:On		Iris Position	Gain Position	0	0	1
3	Source Address	0	R Gain (H)	R Gain (L)	B Gain (H)	B Gain (L)	WB Mode	Aperture Gain	Exposure Mode	Spot AE 0:Off 1:On				0	Exposure Comp. Position	1
2		0								Backlight 0:Off 1:On				0		1
1		0								Exposure Comp. 0:Off 1:On				0		1
0		0								Slow Shutter 0:Off 1:On				0		1

15.3 CAM_Other_BlockInq

bit	0	1	2	3	4	5	6	7	8	9	10	11	12	13	14	15
7	Destination Address	0	0	0	0	0	0	0	0	0	0	0	0	0	0	1
6		1	1	0	0	0	0	0	0	0	0	0	0	0	0	1
5		0	0	0	0	0	0	0	0	0	0	0	0	0	0	1
4		1	1	ICR 0:Off 1:On	0	0	0	0	0	0	0	0	Memory 1:Provided 0:Not provided	0	0	1
3	Source Address	0	0	0	0	Picture Effect Mode	0	0	0	0	0	0	0	0	0	1
2		0	Auto ICR 0:Off 1:On	LR Reverse 0:Off 1:On	0		0	0	0	0	0	0	ICR 1:Provided 0:Not provided	0	0	1
1		0	0	0	0		0	0	0	0	0	0	0	0	0	1
0		0	Power 0:Off 1:On	0	0		0	0	0	0	0	0	System 1:1/50, 1/25 0:1/59.94, 1/29.97	0	0	1

15.4 CAM_Extended_1_BlockInq

bit	0	1	2	3	4	5	6	7	8	9	10	11	12	13	14	15
7	Destination Address	0	0	0	0	0	0	0	0	0	0	0	0	0	0	1
6		1	0	0	0	0	0	0	0	0	0	Color Gain	0	Gamma	0	1
5		0	0	0	0	0	0	0	0	0	0		0		0	1
4		1	0	0	0	0	0	0	0	0	0		0		0	1
3	Source Address	0	0	0	0	0	0	0	Spot AE Position (X)	Spot AE Position (Y)	0		0	0	Gain Limit	1
2		0	0	0	0	0	0	0			0	0	0	0		1
1		0	0	0	0	0	0	0			0	0	0	0		1
0		0	0	0	0	0	0	0			Flip 0:Off 1:On	Flip 1:Provided 0:Not provided	0	0		1

15.5 CAM_Extended_2_BlockInq

bit	0	1	2	3	4	5	6	7	8	9	10	11	12	13	14	15
7	Destination Address	0	0	0	0	0	0	0	0	0	0	0	0	0	0	1
6		1	0	0	0	0	0	0	0	0	0	0	0	0	0	1
5		0	0	0	0	0	0	0	0	0	0	0	0	0	0	1
4		1	0	0	0	0	0	0	0	0	0	0	0	0	0	1
3	Source Address	0	0	0	0	0	0	0	0	0	0	0	0	0	0	1
2		0	WDR Index	0	0	0	0	0	0	0	0	0	0	0	0	1
1		0		0	0	0	0	0	0	0	0	0	0	0	0	1
0		0		0	0	0	0	0	0	0	0	0	0	0	0	1

15.6 CAM_Extended_3_BlockInq

bit	0	1	2	3	4	5	6	7	8	9	10	11	12	13	14	15
7	Destination Address	0	0	0	0	0	0	0	0	0	0	0	0	0	0	1
6		1	0	0	0	0	0	0	0	0	0	0	0	0	0	1
5		0	0	0	0	0	0	0	0	0	0	0	0	0	0	1
4		1	0	0	0	0	0	0	0	0	0	0	0	0	0	1
3	Source Address	0	Color Hue	0	0	0	0	0	0	0	0	0	0	0	0	1
2		0		0	0	0	0	0	0	0	0	0	0	0	0	1
1		0		0	0	0	0	0	0	0	0	0	0	0	0	1
0		0		0	0	0	0	0	0	0	0	0	0	0	0	1

16. RS232 over IP

16.1 Overview of RS232 over IP

RS232 over IP allows you to control this unit from the controller with the IP communication function via the LAN by using RS232.

You can connect up to 5 controllers simultaneously on one LAN segment.

The communication specifications of RS232 over IP are as follows:

16.2 Interface

RJ-45 10Base-T/100Base-TX (automatically discrimination)

16.3 Internet protocol

IPv4

16.4 Transport protocol

UDP

16.5 IP address

Set by the IP card setting command

16.6 Port address

52381

16.7 Delivery confirmation/Retransmission control

Depends on the application

16.8 Coverage

Limited dedicated network in the same segment without going through a bridge connection.

In this section, the device outputting commands, for example, a computer, is called the controller, and this unit and the devices connected to the same LAN are called the peripheral device. In the connection using RS-232/RS-422, the controllers and peripheral devices are connected to a one-direction ring. On the IP communication connection, the controllers and peripheral devices are connected by star type through a LAN.

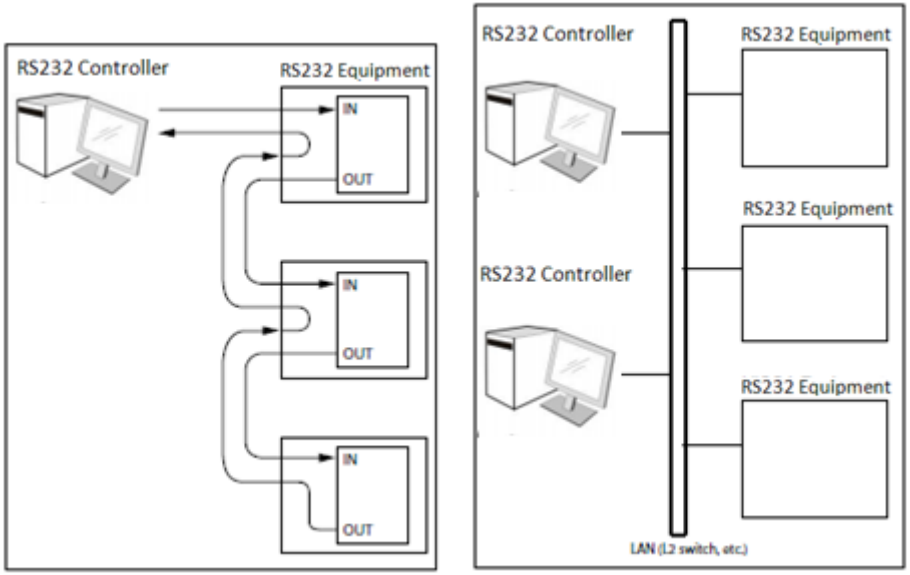

RS232/RS422 connection **IP communication connection**

While the IP communication connection, the address of each device cannot be set in the RS232 message as it is because the controllers and peripheral devices that are connected simultaneously are increased. In this case, addresses of the controllers and peripheral devices that are set in the RS232 message are locked to 0 (for the controller) or 1 (for the peripheral device).

16.9 Packet Structure

The basic unit of VISCA communication is called a packet [Pic.1]. The first byte of the packet is called the header and comprises the sender's and receiver's addresses. For example, the header of the packet sent to the SRG assigned address 1 from the controller (address 0) is 81h in hexadecimal. The packet sent to the SRG assigned address 2 is 82h. In the command list, as the header is 8X, input the address of the SRG to X. The header of the reply packet from the SRG assigned address 1 is 90h. The packet from the SRG assigned address 2 is A0h.

Some of the setting commands for SRG can be sent to all devices at one time (broadcast)*. In the case of broadcast, the

header should be 88h in hexadecimal.
When the terminator is FFh, it signifies the end of the packet.
*The broadcast function is not available for VISCA over IP.

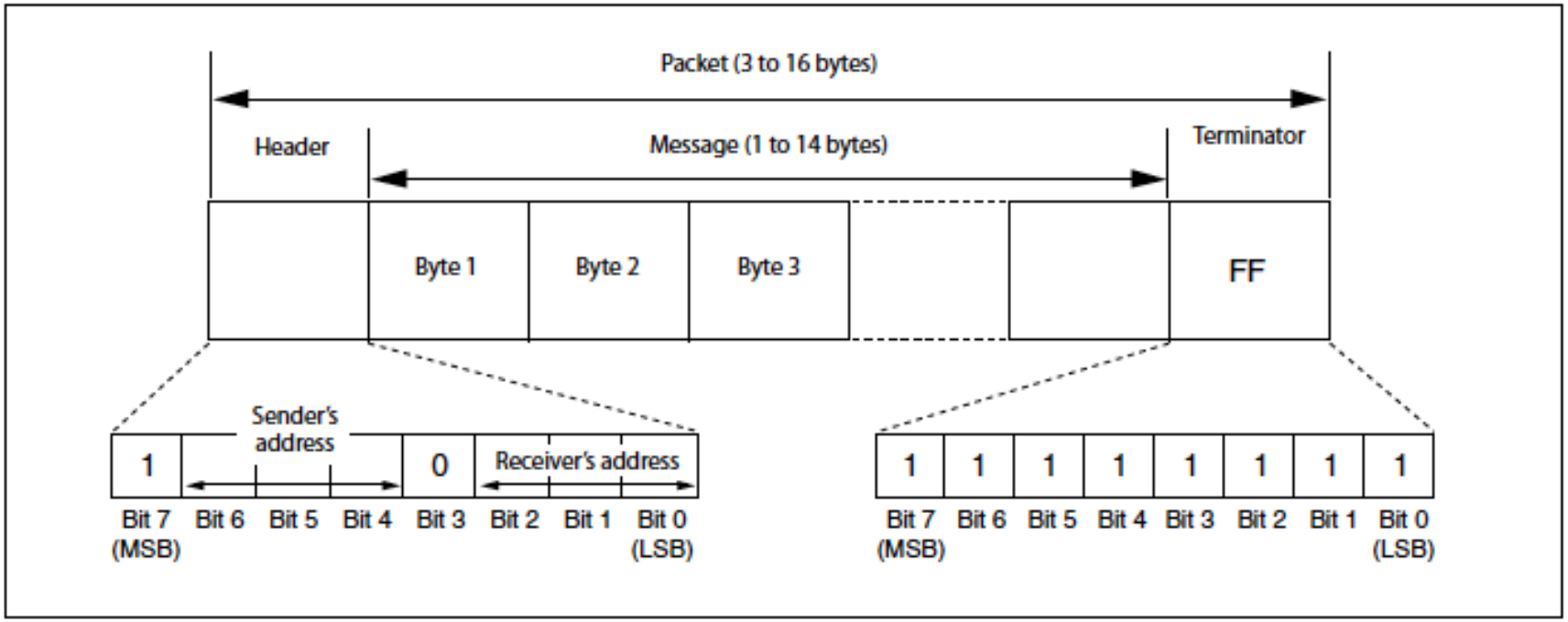

Pic. 1 Packet structure

Note:
Pic. 1 shows the packet structure, while Pic.2 shows the actual waveform. Data flow will take place with the LSB first.

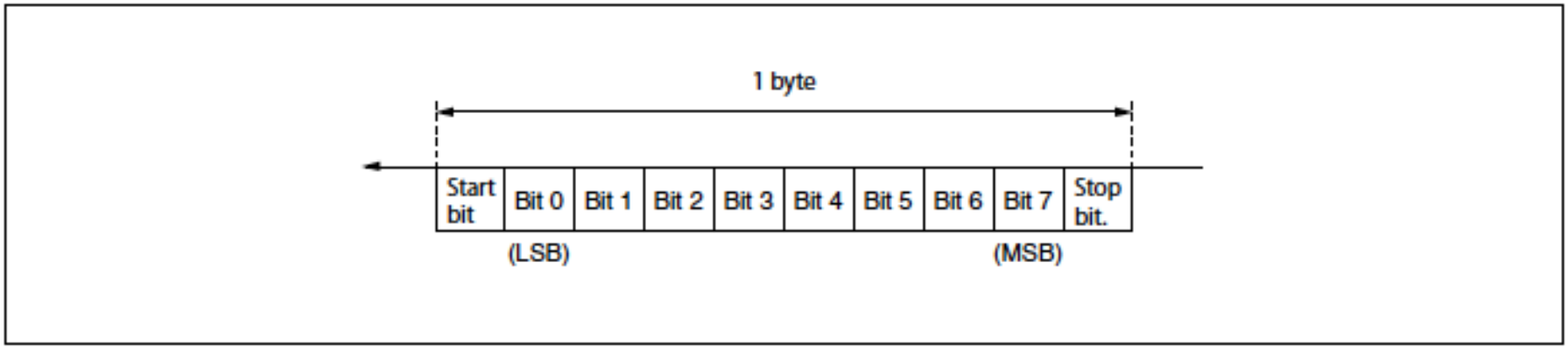

Pic. 2 Actual waveform for 1 byte

17. Communication method of VISCA over IP

16.1 Communication method

VISCA over IP can process the VISCA communication between the controllers and peripheral devices using the messages that can be identified on the LAN, and sends/receives them. Because of this, VISCA over IP is not concerned about the contents of the communication between the controllers and peripheral devices. However, the VISCA communication sequence is different, depending on the types, as follows.

16.2 VISCA command

This is a command from the controller to the peripheral device. When the peripheral device receives this command, Acknowledge is returned. After completing command processing, a completion notice is returned. This command uses the socket of VISCA. The order of completion notices may be changed if the multiple commands are sent to the same peripheral device.

16.3 VISCA inquiry

This is an inquiry from the controller to the peripheral device. When the peripheral device receives this type of command, the reply for the inquiry is returned. This command does not use the socket of VISCA. The order of the replies is not changed if a multiple commands are sent.

16.4 VISCA reply

This is an Acknowledge, completion notice, reply, or error reply from the peripheral device to the controller. The classification for sending messages from the peripheral device to the controller is common.

16.5 VISCA device setting command

This is the device setting command from the controller to the peripheral device. When the peripheral device receives this classifications command, the peripheral device performs the function depend on the command.

16.6 Address

Sets the address of the peripheral device, and does not return a reply to the controller. While using VISCA over IP, the address command is not sent from the controller because a Network Change command from the peripheral device that triggers sending command is not issued.

16.7 IF_Clear

Sends the reply message to the controller after clearing, without using VISCA socket.

16.8 CAM_VersionInq

Sends the reply message to the controller, without using VISCA socket.

16.9 Format

These are the specifications of the message header (8 bytes) and payload (1 to 16 bytes).

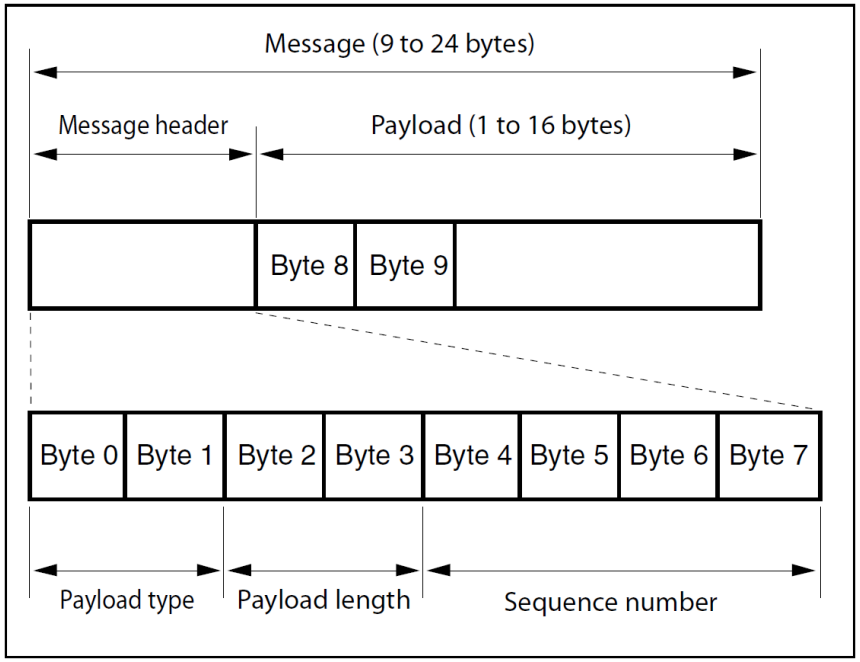

Note: The actual LAN out method is big-endian, LSB first.

Pic.3 Message structure of the VISCA over IP

Example:

	Payload type		Payload length		Sequence number				Payload (1~16Byte)										
Command	Byte 0	Byte 1	Byte 2	Byte 3	Byte 4	Byte 5	Byte 6	Byte 7	Byte 1	Byte 2	Byte 3	Byte 4	Byte 5	Byte 6	Byte 7	Byte 8	Byte 9	...	Byte 16
CAM_Power On	01	00	00	06	00	00	00	01	81	01	04	00	02	FF					
Pan-tiltDrive Up	01	00	00	09	00	00	00	02	81	01	06	01	0C	0C	03	01	FF		
Pan-tiltDrive Down	01	00	00	09	00	00	00	03	81	01	06	01	0C	0C	03	02	FF		
CAM_FocusModeInq	01	10	00	5	00	00	00	04	81	9	4	38	FF						

16.10 Payload type

Stores the value (Byte 0 and Byte 1) of the following table on the payload division.

Name	Value (Byte 0)	Value (Byte 1)	Description
VISCA command	01h	00h	Stores the VISCA command.
VISCA inquiry	01h	10h	Stores the VISCA inquiry.
VISCA reply	01h	11h	Stores the reply for the VISCA command and VISCA inquiry, or VISCA device setting command.
VISCA device setting command	01h	20h	Stores the VISCA device setting command.
Control command	02h	00h	Stores the control command.
Control reply	02h	01h	Stores the reply for the control command.

Pic.4 Payload Type Table

16.11 Payload length

Stores the number of bytes (1 to 16) of data is stored on the payload.
Example: when the payload length is 16 bytes.
Byte 2:00h
Byte 3:10h

16.12 Sequence number

The controller stores the sequence number that is added every time a message is sent. If the sequence number reaches the limit, next values will be 0. The peripheral device saves the sequence number in the message from the controller, and stores the sequence number of the received message corresponding to the message sent to the controller.

16.13 Payload

Depending on the payload type, the following are stored.

- VISCA command
  - Stores the packet of the VISCA command.
- VISCA inquiry
  - Stores the packet of VISCA message.
- VISCA reply
  - Stores the reply for the command or inquiry (Acknowledge message, completion message, or error message).

- VISCA device setting command
  - Stores the packet of the VISCA device setting command.
- Control command
  - The following are stored on the payload division of the control command.

Name	Value	Description
RESET	01h	Resets the sequence number to 0. The value that was set as the sequence number is ignored.
ERROR	0Fyyh	yy=01: Abnormality in the sequence number.
		yy=02: Abnormality in the message (message type)

- Controlled reply
  - The following are stored on the payload division of the reply for the control command.

Message	Value	Description
Acknowledge	01h	Reply for RESET.

16.14 Delivery confirmation

VISCA over IP uses UDP as a communications protocol of the transport layer. Delivery of messages is not guaranteed for the UDP communication. Delivery confirmation and retransmission should be performed on the application.
When the controller sends a message to the peripheral device, wait until a reply for the message is received before sending the next message. You can confirm delivery of messages by managing the time-out waiting for a reply message sent.
If time out occurs on the controller, loss of one of the following message is considered:

- **Command**
- **Acknowledge message**
- **Completion message for command**

- **Inquiry**
- **Reply message for the inquiry**
- **Error message**
- **Inquiry of the VISCA device setting command**
- **Reply message of the VISCA device setting command.**

18. PelcoD Command List

18.1 Internal Command

Internal Command	Byte 1	Byte 2 (Address)	Byte 3	Byte 4	Byte 5	Byte 6	Byte 7	Comments
Stop	0xFF	0x00 ~ 0xFF	0x00	0x00	0x00	0x00	CheckSum	Stop Zoom/Focus
Zoom Tele	0xFF	0x00 ~ 0xFF	0x00	0x20	0x00	0x00	CheckSum	Speed = VISCA Tele (Variable) = 0x03
Zoom Wide	0xFF	0x00 ~ 0xFF	0x00	0x40	0x00	0x00	CheckSum	Speed = VISCA Wide (Variable) = 0x03
Focus Far	0xFF	0x00 ~ 0xFF	0x00	0x80	0x00	0x00	CheckSum	Speed = VISCA Far (Variable) = 0x02
Focus Near	0xFF	0x00 ~ 0xFF	0x01	0x00	0x00	0x00	CheckSum	Speed = VISCA Near (Variable) = 0x02
CheckSum = Mod((Byte 2 + Byte 3 + Byte 4 + Byte 5 + Byte 6), 0x100);								

18.2 External Command

Extenal Command	Byte 1	Byte 2 (Address)	Byte 3	Byte 4	Byte 5	Byte 6	Byte 7	Comments
Set Preset	0xFF	0x00 ~ 0xFF	0x00	0x03	0x00	0xpq	CheckSum	Memory Number(pq:0x00 To 0xFF)
Clear Preset	0xFF	0x00 ~ 0xFF	0x00	0x05	0x00	0xpq	CheckSum	
Goto Preset	0xFF	0x00 ~ 0xFF	0x00	0x07	0x00	0xpq	CheckSum	
POWER	0xFF	0x00 ~ 0xFF	0x00	0x45	0x00	On:0x01 Off: 0x02	CheckSum	Power On/Off
ENTER	0xFF	0x00 ~ 0xFF	0x00	0x49	0x00	0x00	CheckSum	Menu Enter
BACKLIGHT	0xFF	0x00 ~ 0xFF	0x00	0x31	0x00	On:0x01 Off: 0x02	CheckSum	Back Light Compensation ON/OFF (* Enabled during AE Full Auto Mode)
MIRROR	0xFF	0x00 ~ 0xFF	0x00	0x4B	0x00	0x01:Normal 0x02:Mirror 0x03:Flip 0x04:Mirror+Flip	CheckSum	Mirror Image ON/OFF & Picture flip ON/OFF
FREEZE	0xFF	0x00 ~ 0xFF	0x00	0x4D	0x00	On:0x01 Off:	CheckSum	Still Image ON/OFF

						0x02		
Auto Foucus / Manual Focus	0xFF	0x00 ~ 0xFF	0x00	0x2B	0x00	AF:0x01 MF: 0x02	CheckSum	AF/MF Switch
Bright Ctrl Up	0xFF	0x00 ~ 0xFF	0x00	0xA1	0x00	0x00	CheckSum	AE Bright Control Up
Bright Ctrl Down	0xFF	0x00 ~ 0xFF	0x00	0xA3	0x00	0x00	CheckSum	AE Bright Control Down

18.3 Query Command

Query Command	Byte 1	Byte 2 (Address)	Byte 3	Byte 4	Byte 5	Byte 6	Byte 7	Comments
Query Command Package								
Query Zoom Position	0xFF	0x00 ~ 0xFF	0x00	0x55	0x00	0x00	CheckSum	Get Zoom Position
Query POWER	0xFF	0x00 ~ 0xFF	0x00	0x61	0x00	0x00	CheckSum	Get Power On/Off Status
Query BACKLIGHT	0xFF	0x00 ~ 0xFF	0x00	0x65	0x00	0x00	CheckSum	Get Backlight On/Off Status
Query MIRROR	0xFF	0x00 ~ 0xFF	0x00	0x67	0x00	0x00	CheckSum	Get Mirror & Flip Status
Query FREEZE	0xFF	0x00 ~ 0xFF	0x00	0x69	0x00	0x00	CheckSum	Get Freeze Status
Query Ack Package								
Query Zoom Response	0xFF	0x00 ~ 0xFF	0x00	0x5D	0xpq	0xrz	CheckSum	pqrs: Zoom Position , pqrs: 0x0000~0x4000
Query POWER Response	0xFF	0x00 ~ 0xFF	0x00	0x71	0x00	On:0x01 Off: 0x02	CheckSum	Power Status Response
Query BACKLIGHT Response	0xFF	0x00 ~ 0xFF	0x00	0x75	0x00	On:0x01 Off: 0x02	CheckSum	Backlight Status Response
Query MIRROR Response	0xFF	0x00 ~ 0xFF	0x00	0x77	0x00	0x01:Normal 0x02:Mirror 0x03:Flip	CheckSum	Mirror & Flip Status Response

Query Command	Byte 1	Byte 2 (Address)	Byte 3	Byte 4	Byte 5	Byte 6	Byte 7	Comments
						0x04:Mirror+Flip		
Query FREEZE Response	0xFF	0x00 ~ 0xFF	0x00	0x79	0x00	On:0x01 Off: 0x02	CheckSum	Freeze Status Response
CheckSum = Mod((Byte 2 + Byte 3 + Byte 4 + Byte 5 + Byte 6), 0x100);								